GLKR1S-574

S/S SINGLE DOOR FRIDGE 600L

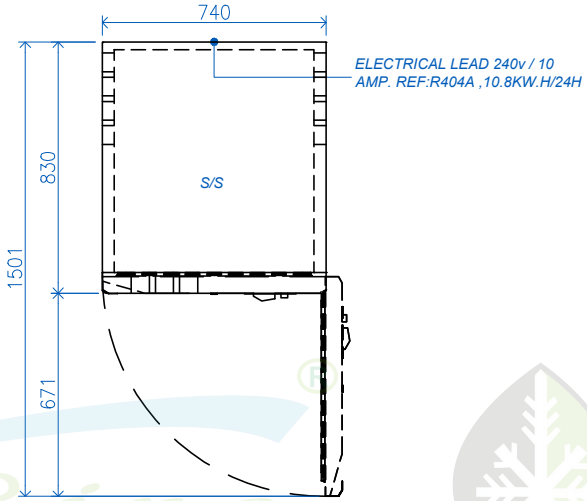

1 GLKR1S-574 PLAN
Scale:1 : 25

Features:

- Stainless Steel internal and external
- Lockable Panel door
- Top mounted refrigeration system
- 3 rows of Heavy duty epoxy coated shelves

Specification:

- 600 litre capacity
- Temperature range 0°c to 8°c
- Electronic control panel
- Automatic interior lighting
- Heavy duty castors fitted, front with brakes
- W740 x D828 x H2050mm
- 240 volt / 10 Amp. Ref:R134a , 1.84Kw.h/24h
- Full Load Amps (F.L.A.) : 3.1

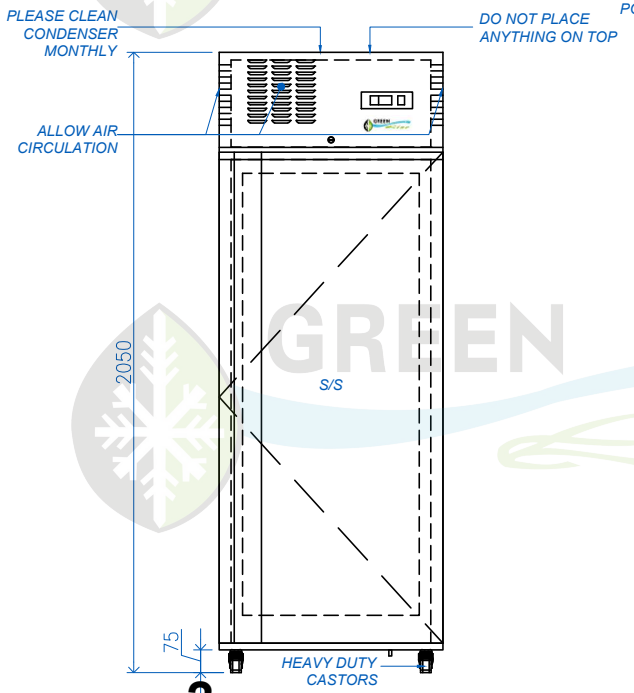

2 GLKR1S-574 FRONT
Scale:1 : 25

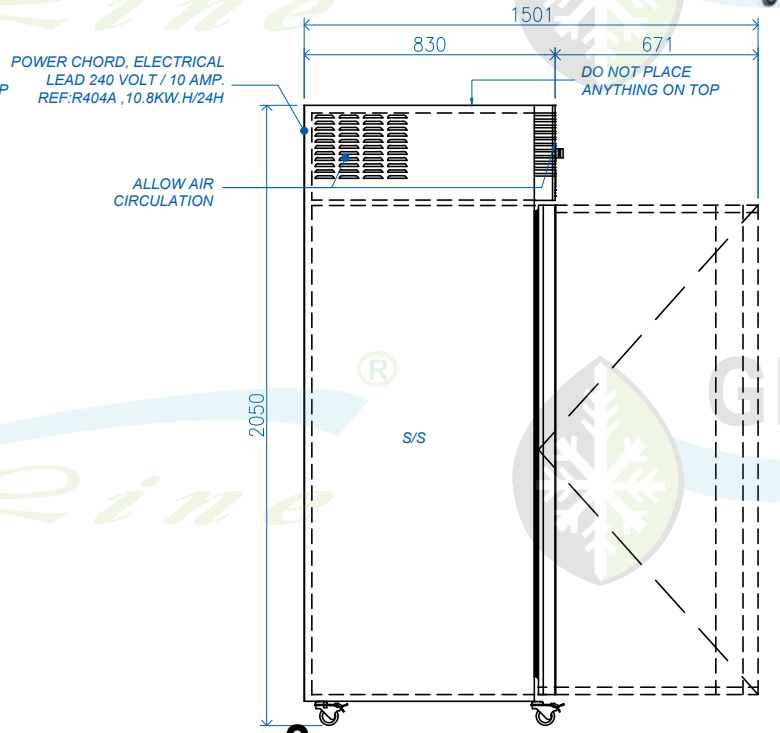

3 GLKR1S-574 SIDE
Scale:1 : 25

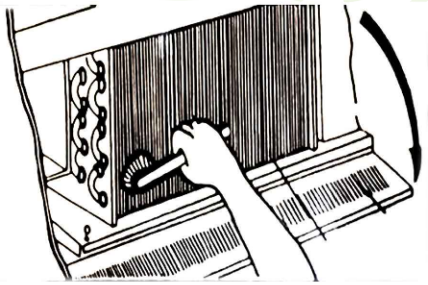

MAINTENANCE:

1. DISCONNECT THE POWER SUPPLY CABLE FROM MAINS.
2. CLEAN THE REFRIGERATOR WITH MILD DETERGENT AND DRY IT WITH SOFT CLOTH.
3. USE A BRISH OR VACUUM CLEANER TO CLEAN THE CONDENSER.
4. IT IS ADVISABLE TO CLEAN THE CONDENSER ONCE A MONTH

THIS DRAWING MUST NOT BE SCALED

THE CONTRACTOR SHALL VERIFY ALL DIMENSIONS, DATA AND LEVEL PRIOR TO THE COMMENCEMENT OF WORK. ALL ERRORS AND OMISSIONS BETWEEN THE DRAWINGS AND SPECIFICATION ARE TO BE REPORTED IMMEDIATELY.

-----© Copyright of Hospitality Equipment 2020 Pty. Ltd.-----

HE2020 HOSPITALITY EQUIPMENT 2020 PTY LTD
HOSPITALITY EQUIPMENT 2020 Pty. Ltd.
A: Unit 3/49-63 Victoria Street, Smithfield 2164
P: 02 9637 3737
E: salesnsw@he2020.com.au
W: www.he2020.com.au
COMMERCIAL KITCHEN CONSULTANT

DRAWING TITLE: GLKR1S-574			
DRAWN L.	DATE 21.09.2021	SCALE (A4)	
PROJECT NO.	DRAWING NO.	REV. A1	